2" ½ VALVES

SCREW CONNECTION

AE1460B With Pilot Group

The classic 90° valve with female thread

3 WARRANTY YEARS

PRODUCT CERTIFICATIONS

STANDARD

OPZIONALI

VALVE TECHNICAL FEATURES

Features		Values
Out		2" 1/2 Gas
In		2" 1/2 Gas
Working Pressure		1,5-8 bar
Standard Temperature Range		-40 °C ; +100 °C
High Range Temparature		-20 °C ; +200 °C
Kv		114 m^3/h
Weight		3.28 kg
Protection Level		IP65

Autel S.r.l. | Via Bagnoli, 9 - 41049 Sassuolo, Modena
Tel. +39 (0) 536 802104 - Fax. +39 (0) 536 803372 - info@aeautel.it
C.F. e P. IVA 00963880364

VALVE TECHNICAL FEATURES

Features		Values
Air quality classes (ISO 8573-1)	For Solid	2
	For Water with T > +3°C	4
	For Water with -20°C < T < +3°C	3
	For Water with -40°C < T < -20°C	2
	For Oil	1

Autel S.r.l. | Via Bagnoli, 9 - 41049 Sassuolo, Modena
Tel. +39 (0) 536 802104 - Fax. +39 (0) 536 803372 - info@aeautel.it
C.F. e P. IVA 00963880364

PARTS LIST

No.	Description	Material
A	Clip	CS Galvanized
B	Coil	PA
C	Connector	PA + NBR
D	Pilot	SS + Brass
1	Screw M6	SS
2	Washer	SS
3	Cover 3/4"	Die Cast Alu
4	Diaphragm 3/4"	TPE
5	Screw M8	SS
6	Washer	SS
7	Cover 2" 1/2	Die Cast Alu
8	Spring	SS
9	Spring	Spring
11	Body 2" Screw	Die Cast Alu
10a	STD Diaphragm 2"1/2	TPE
10b	HT Diaphragm 2" 1/2Kit	NBR+PTFE

Immagine

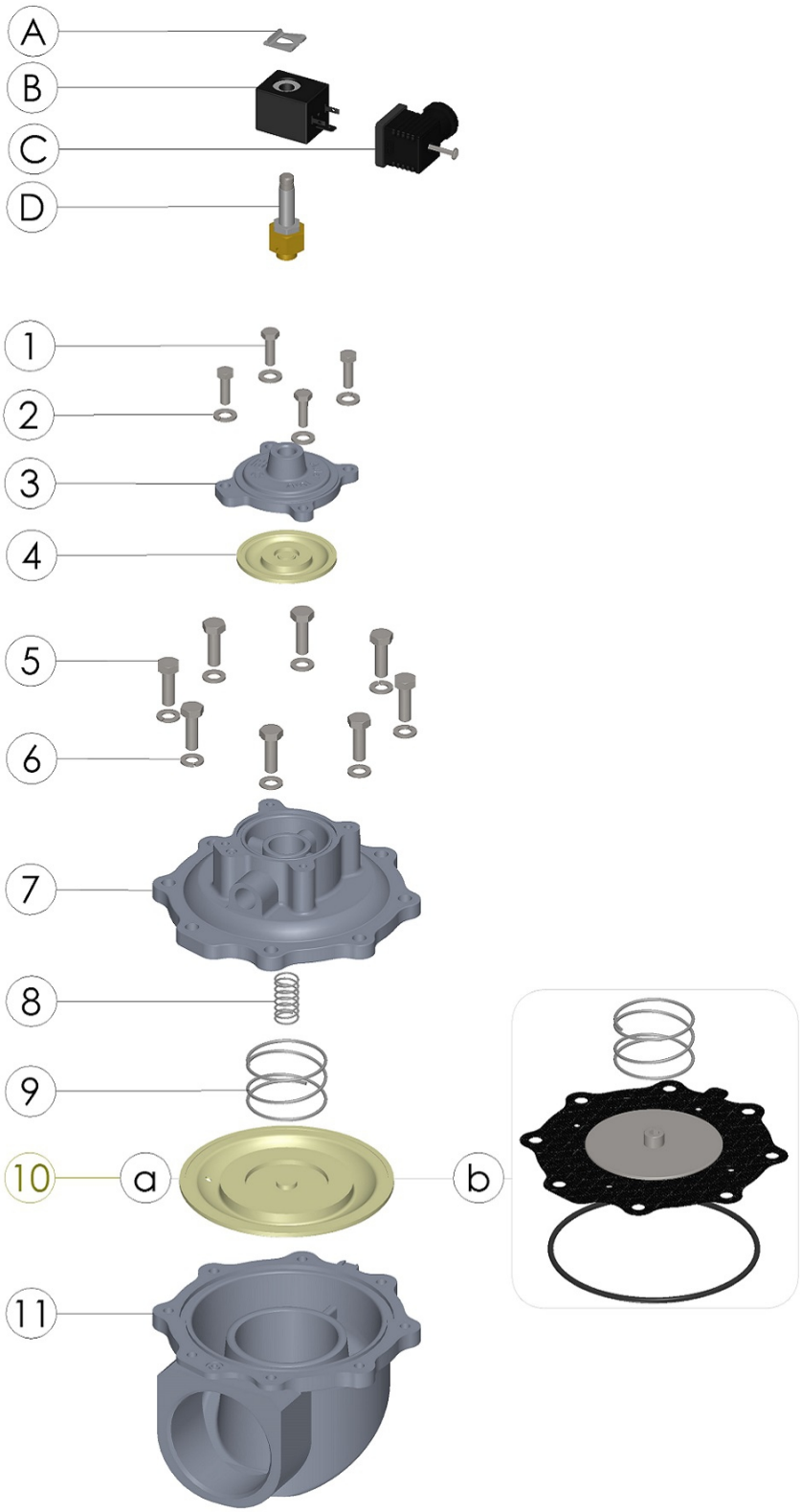

DIMENSIONAL LAYOUT

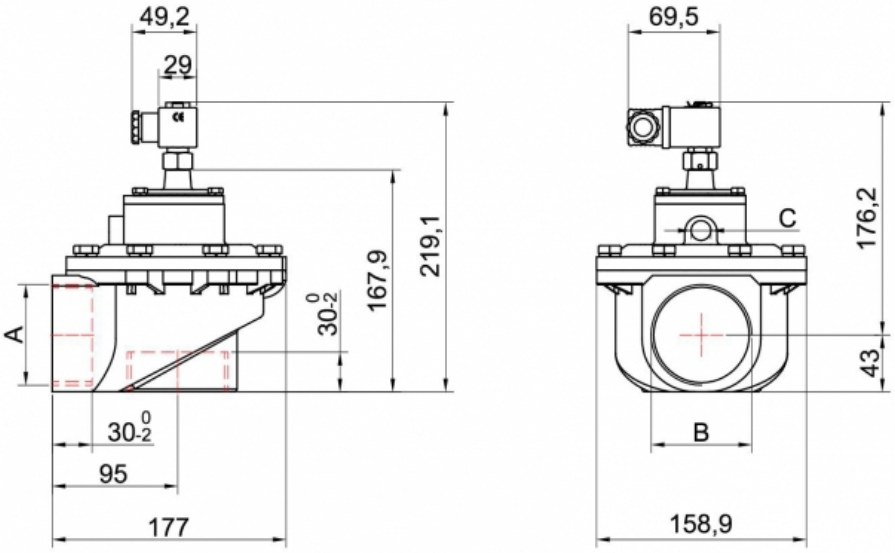

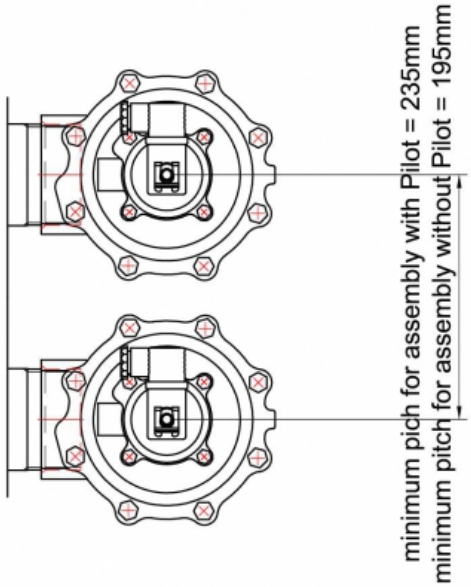

HOLES CHARACTERISTICS

HOLES	STANDARD	OPTIONAL
A	2 ½" G (ISO 228/1)	-
B	2 ½" G (ISO 228/1)	-
C	3/8" G (ISO 228/1)	-
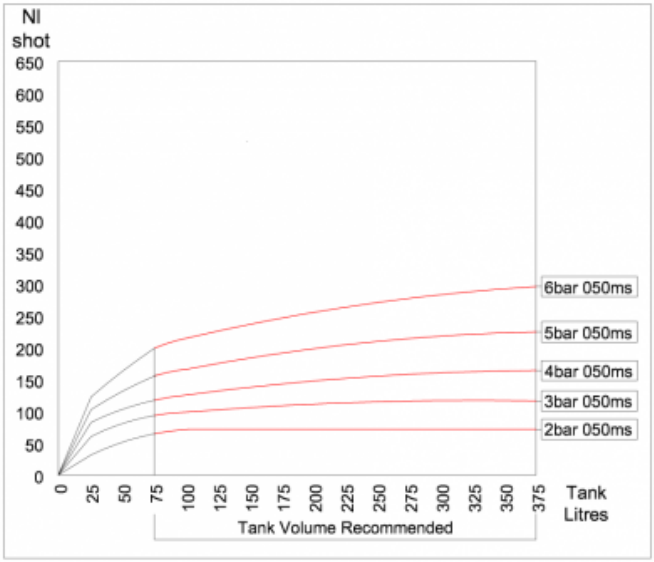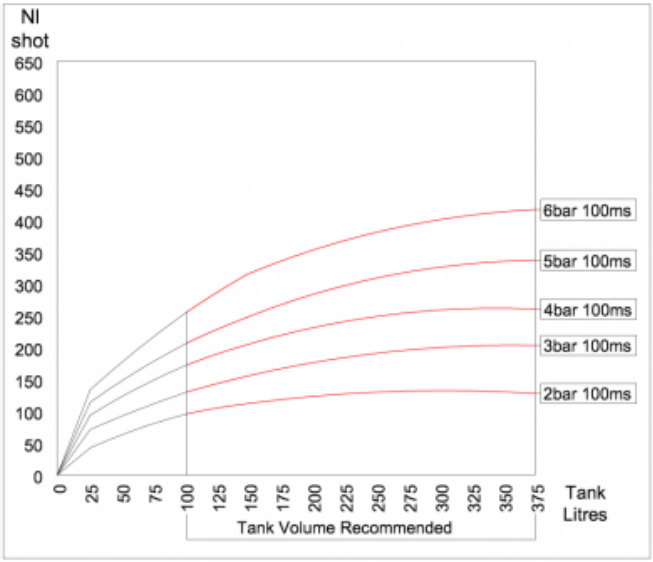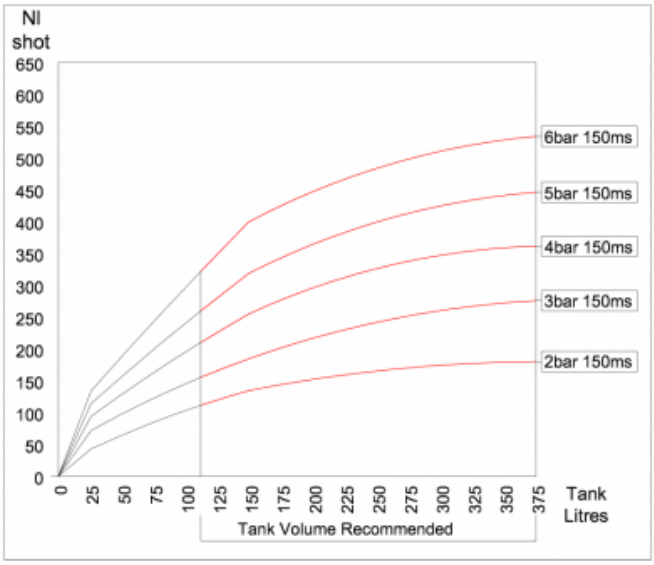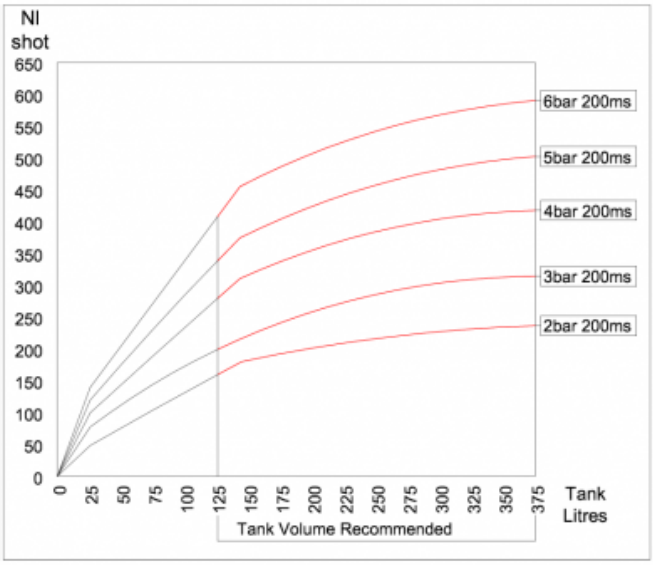
CONSUMPTION GRAPHS