2" VALVES

INTEGRATED FOR Ø 8 " TANK

AE2450I08 With Pneumatic Valve

High performance valve integrated in the tank

3 WARRANTY YEARS

PRODUCT CERTIFICATIONS

STANDARD

OPZIONALI

VALVE TECHNICAL FEATURES

Features		Values
Out		Pipe 2"
Working Pressure		1,5-8 bar
Standard Temperature Range		-40 °C ; +100 °C
High Range Temparature		-20 °C ; +200 °C
Kv		120 m^3/h
Weight		4,4-4,8 kg
Protection Level		IP65

Autel S.r.l. | Via Bagnoli, 9 - 41049 Sassuolo, Modena
Tel. +39 (0) 536 802104 - Fax. +39 (0) 536 803372 - info@aeautel.it
C.F. e P. IVA 00963880364

VALVE TECHNICAL FEATURES

Features		Values
Air quality classes (ISO 8573-1)	For Solid	2
	For Water with T > +3°C	4
	For Water with -20°C < T < +3°C	3
	For Water with -40°C < T < -20°C	2
	For Oil	1

Autel S.r.l. | Via Bagnoli, 9 - 41049 Sassuolo, Modena
Tel. +39 (0) 536 802104 - Fax. +39 (0) 536 803372 - info@aeautel.it
C.F. e P. IVA 00963880364

PARTS LIST

No.	Description	Material
1	Screw M6	SS
2	Washer	SS
3	Cover 3/4"	Die Cast Alu
4	Diaphragm 3/4"	TPE
5	Screw M8	SS
6	Washer	SS
7	Cover 2"	Die Cast Alu
8	Spring	SS
9	Spring	SS
11	Body 2" Integrated	Die Cast Alu
12	Body Tank O'Ring	NBR
13	Clamp Tank O'Ring	NBR
14	Clamp 2"	Die Cast Alu
15	Pipe Clamp O'Ring	NBR
16	Washer 2"	Pa 6,6+ Ela
10a	STD Diaphragm 2"	TPE
10b	HT Diaphragm 2" Kit	NBR+PTFE
E	Optional Fitting	Nickeled Brass
17	Blow Pipe 2"	CS or SS

Immagine

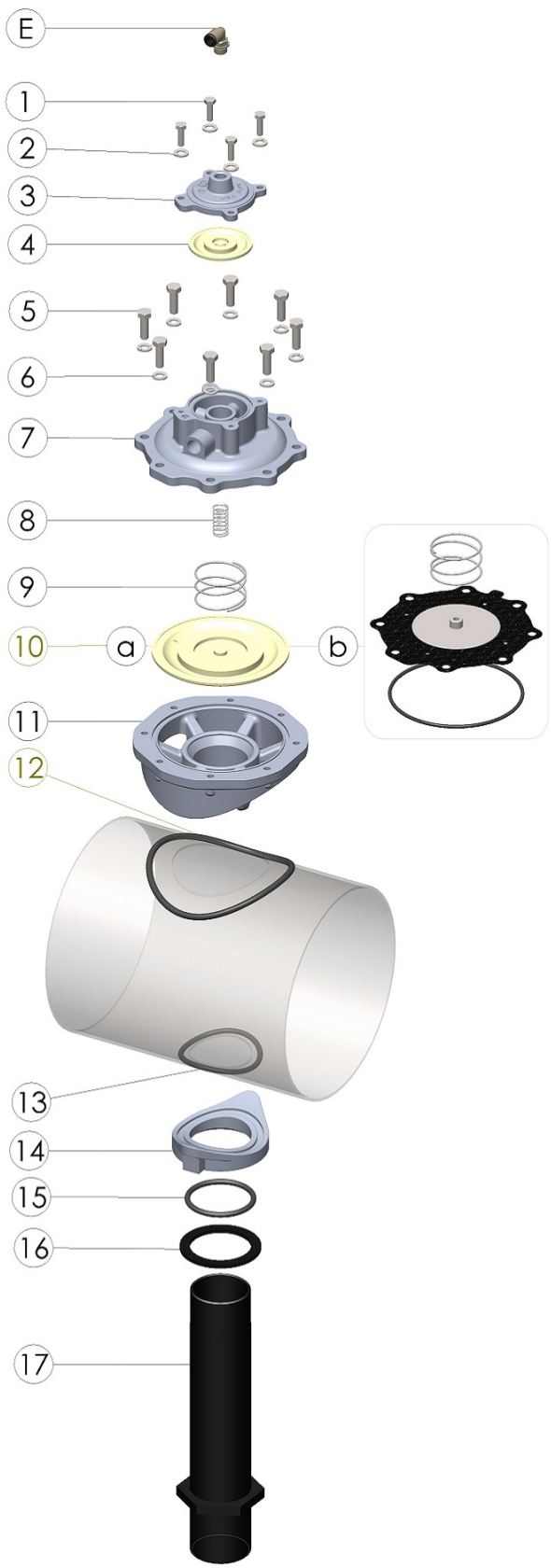

DIMENSIONAL LAYOUT

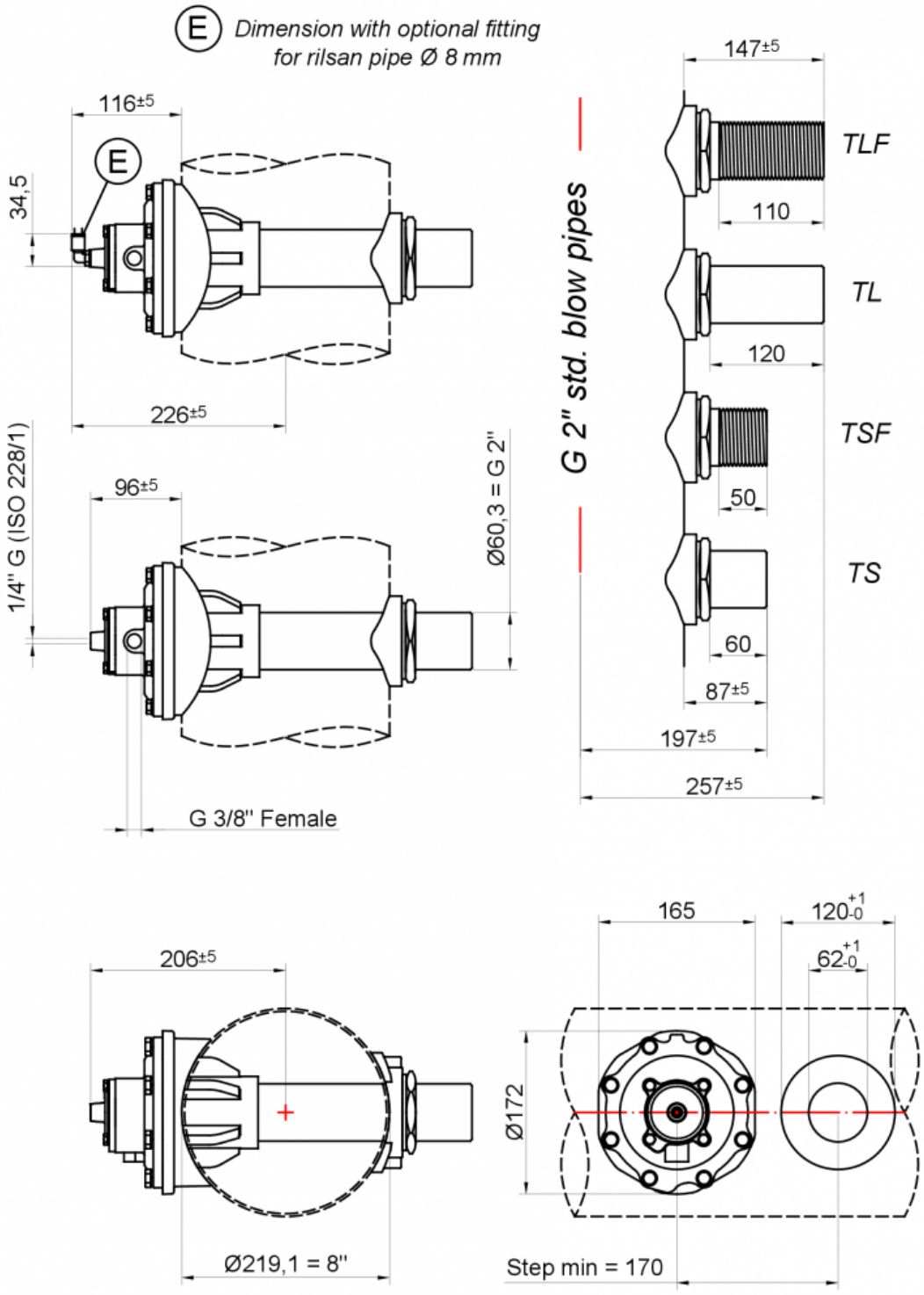
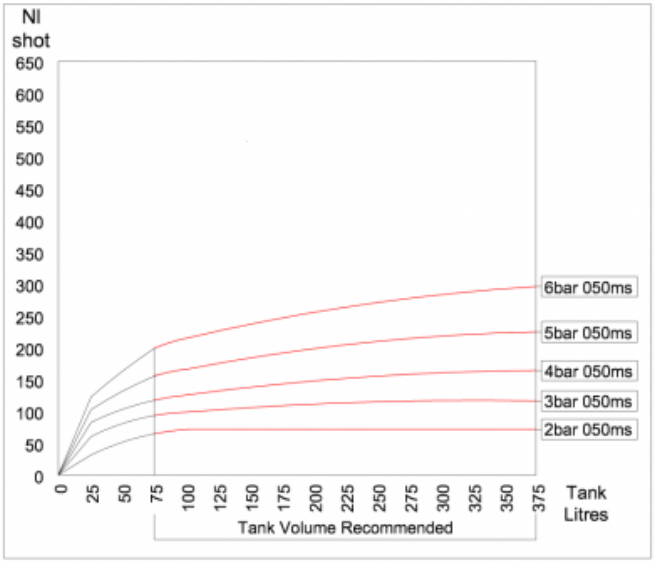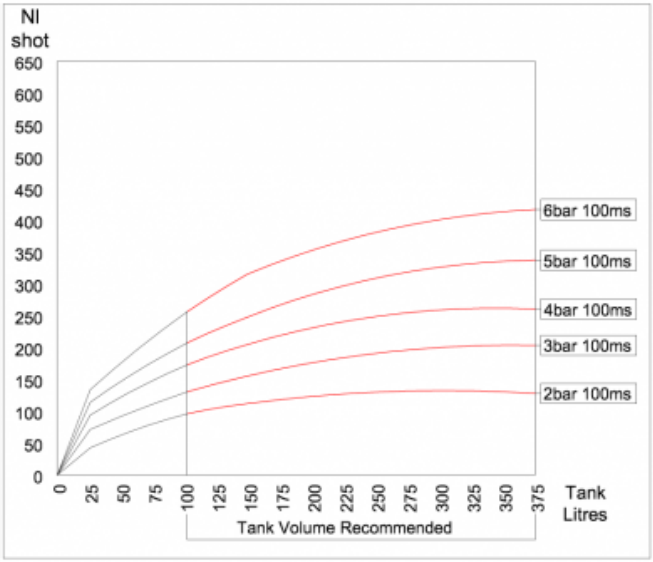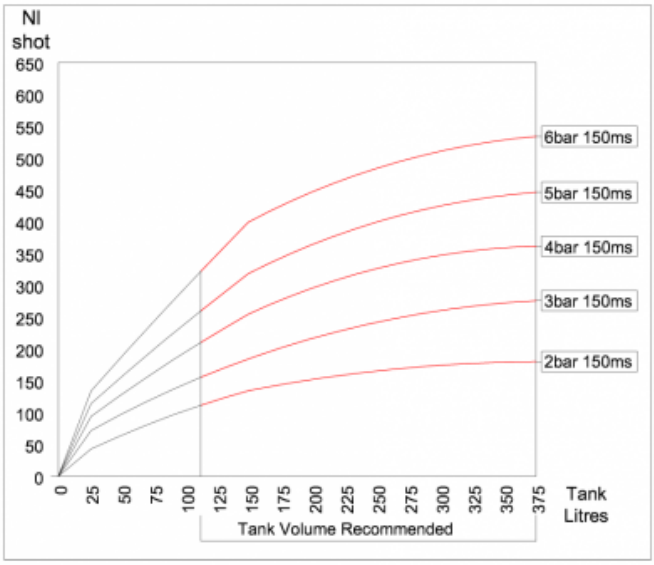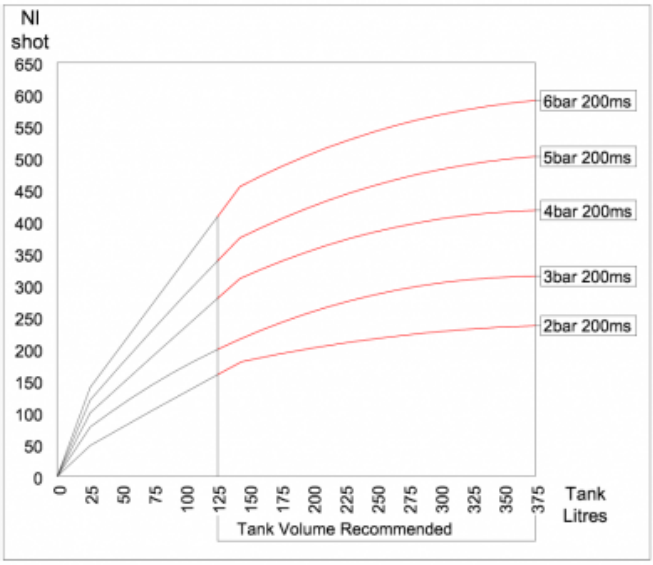
CONSUMPTION GRAPHS